HRM Baseline Nov 2013_OV-6c Context Manage Casualty Assistance Programs (Business Process)
System Architect
Monday, October 28, 2013 2:18 PM
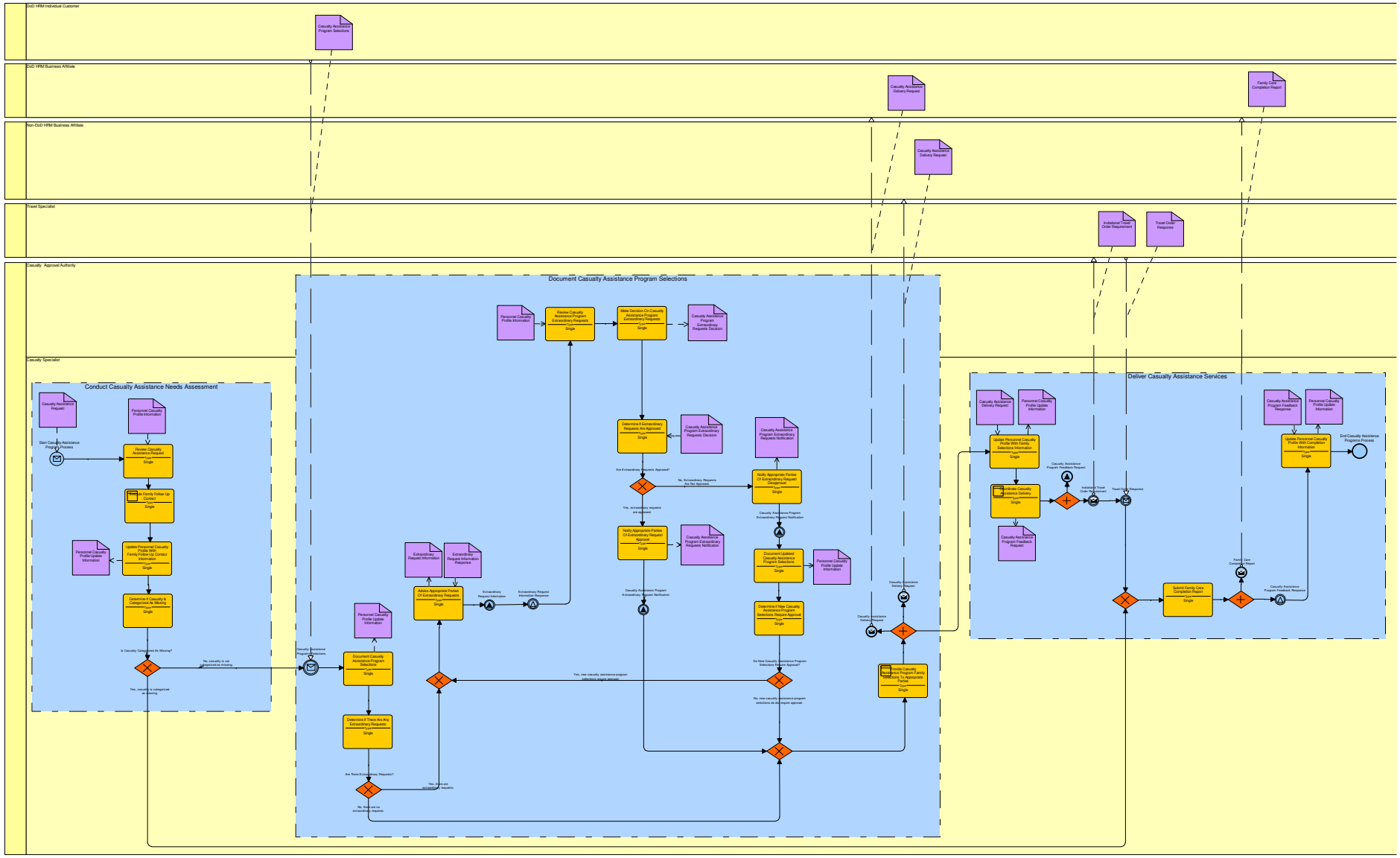
This process model contains military input only at this time. It will be updated as civilian input is obtained.